WOODPECKER LIGHTING

designed by Niklas Jessen | 2014

Woodpecker 'Brass'

DESIGN

Woodpecker merges tradition and innovation in a clear and reduced form, appearing as a simple line which extends into the room. The light can be positioned in every direction and is hand built using sustainable materials wherever possible. It integrates long lasting and dimmable LED technology which provides warm direct light for your home or work space. Woodpecker's combination of materials, using natural wood and steel, conveys timeless comfort.

EN

WOODPECKER LIGHTING

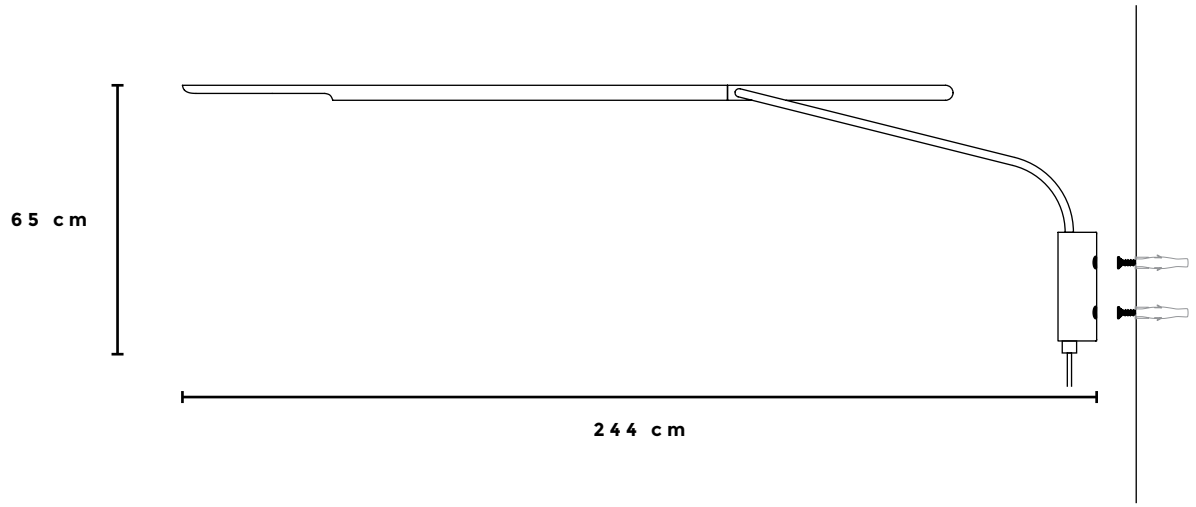

PRODUCTION PROCESS

Woodpecker is hand built by local craftsmen in our workshop.

TYPE | ENVIRONMENT

Wall lamp | indoor

DIMENSIONS

244 cm x 65 cm

WEIGHT

7,35 kg

MATERIAL

Ash wood | Steel

COLOR

Black

Black finish

White

White finish

Brass

Natural finish & Brass finish

LIGHT SOURCE & ENERGY EFFICIENCY

LED 25W | dimmable | luminous flux 1000 lumen
warm-white | color temperature 2700K | color rendition 90 Ra

VOLTAGE

250V | 50Hz

SPECIFICATIONS

MAINTENANCE

Wipe off dust with feather duster. To remove fresh stains wipe with a silghtly moist cloth and polish with a dry cotton cloth. Always switch off the electricity before cleaning.
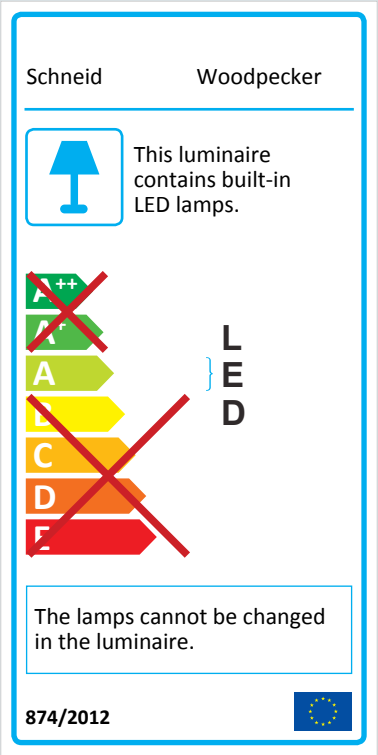
ENERGY LABEL